FITTINGS

ZSCA 002

with 1"1/4G connection

IMAGE

TECH DRAWING

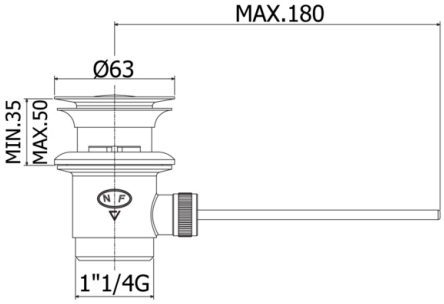

DESCRIPTION

Standard pop up waste

FINISHES

CR BO NO NKNSP HGSP ST BR RM GF BL NL

ISO 14001 BUREAU VERITAS Certification

ISO 45001 BUREAU VERITAS Certification

ISO 9001 BUREAU VERITAS Certification

Product, measurements and specifications shown are subject to change without notice.

Copyright © RUBINETTERIA PAFFONI S.P.A. - Cap. Soc. 1.034.000 i.v. - C.C.I.A.A. n. 114431 - M. NO 001278 - Iscr. Trib. Novara n. 4790 Cod. Fisc. e partita IVA IT 00250430030