JOLLY

JL 051K

with 1”1/4G Clic-Clac press top waste

IMAGE

TECH DRAWING

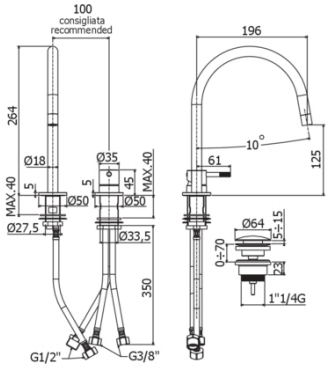

DESCRIPTION

2-hole wash basin mixer with fixed spout complete with:

- aerator M16x1
- set of 2 stainless steel hoses 3/8”G

FINISHES

CR NO ST

LINKS

FLOW RATE

SPARE PARTS

INSTRUCTION SHEET

ISO 14001 BUREAU VERITAS Certification

ISO 45001 BUREAU VERITAS Certification

ISO 9001 BUREAU VERITAS Certification

Product, measurements and specifications shown are subject to change without notice.

Copyright © RUBINETTERIA PAFFONI S.P.A. - Cap. Soc. 1.034.000 i.v. - C.C.I.A.A. n. 114431 - M. NO 001278 - Iscr. Trib. Novara n. 4790 Cod. Fisc. e partita IVA IT 00250430030