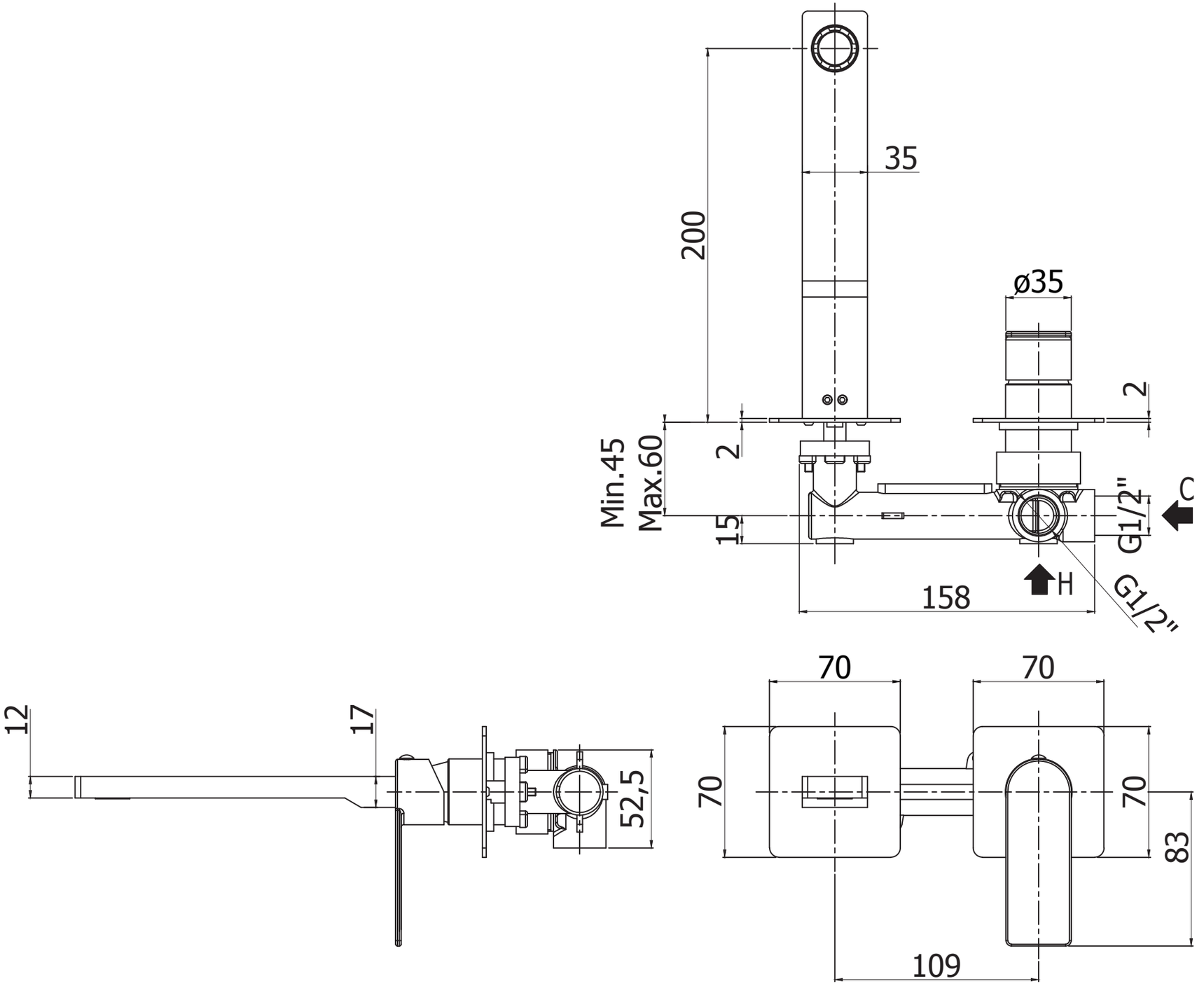
35
200
ø35
2
Min.45
Max.60
2
15
G1/2"
C
H
158
G1/2"
70
70
12
17
52,5
70
70
83
109