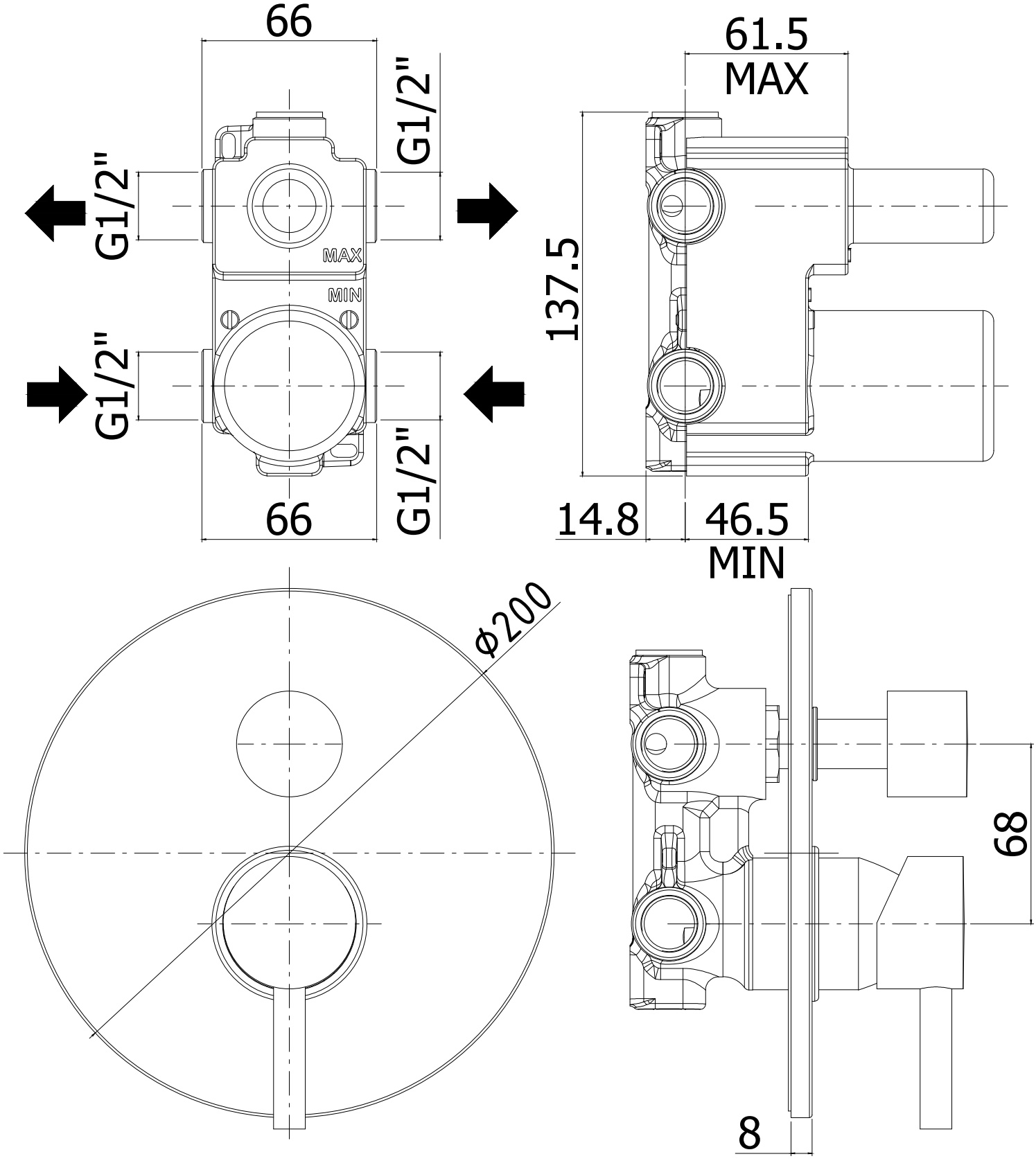
66
G1/2"
G1/2"
MAX
MIN
G1/2"
G1/2"
66
61.5
MAX
137.5
14.8
46.5
MIN
Ø200
68
8