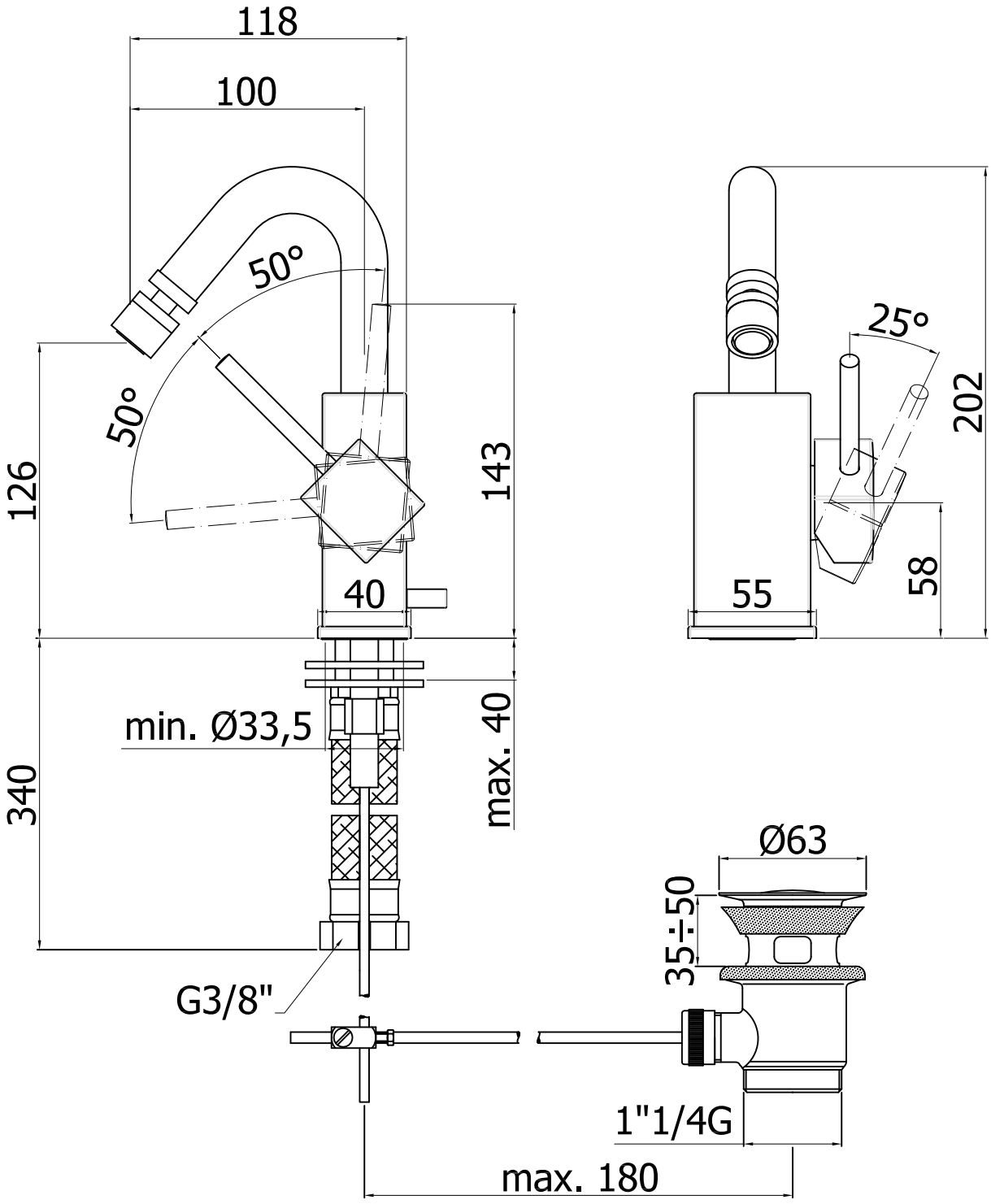
118
100
50°
50°
126
143
40
340
min. Ø33,5
max. 40
G3/8"
25°
202
55
58
Ø63
35÷50
1"1/4G
max. 180