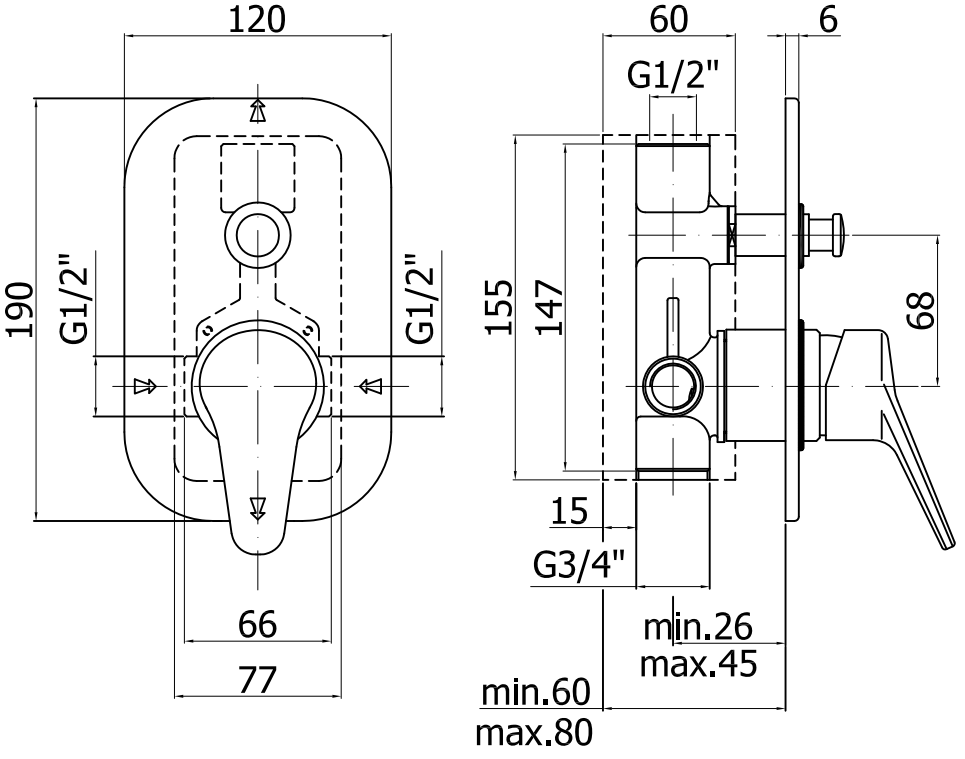
120
190
G1/2"
G1/2"
66
77
60
6
G1/2"
155
147
68
15
G3/4"
min.26
max.45
min.60
max.80

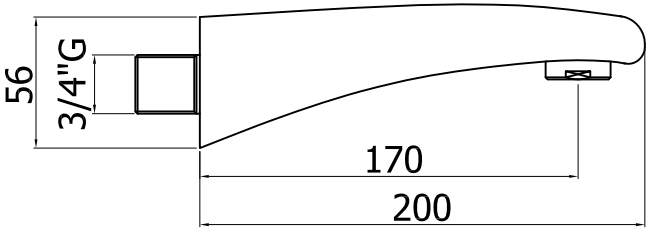
56
3/4"G
170
200