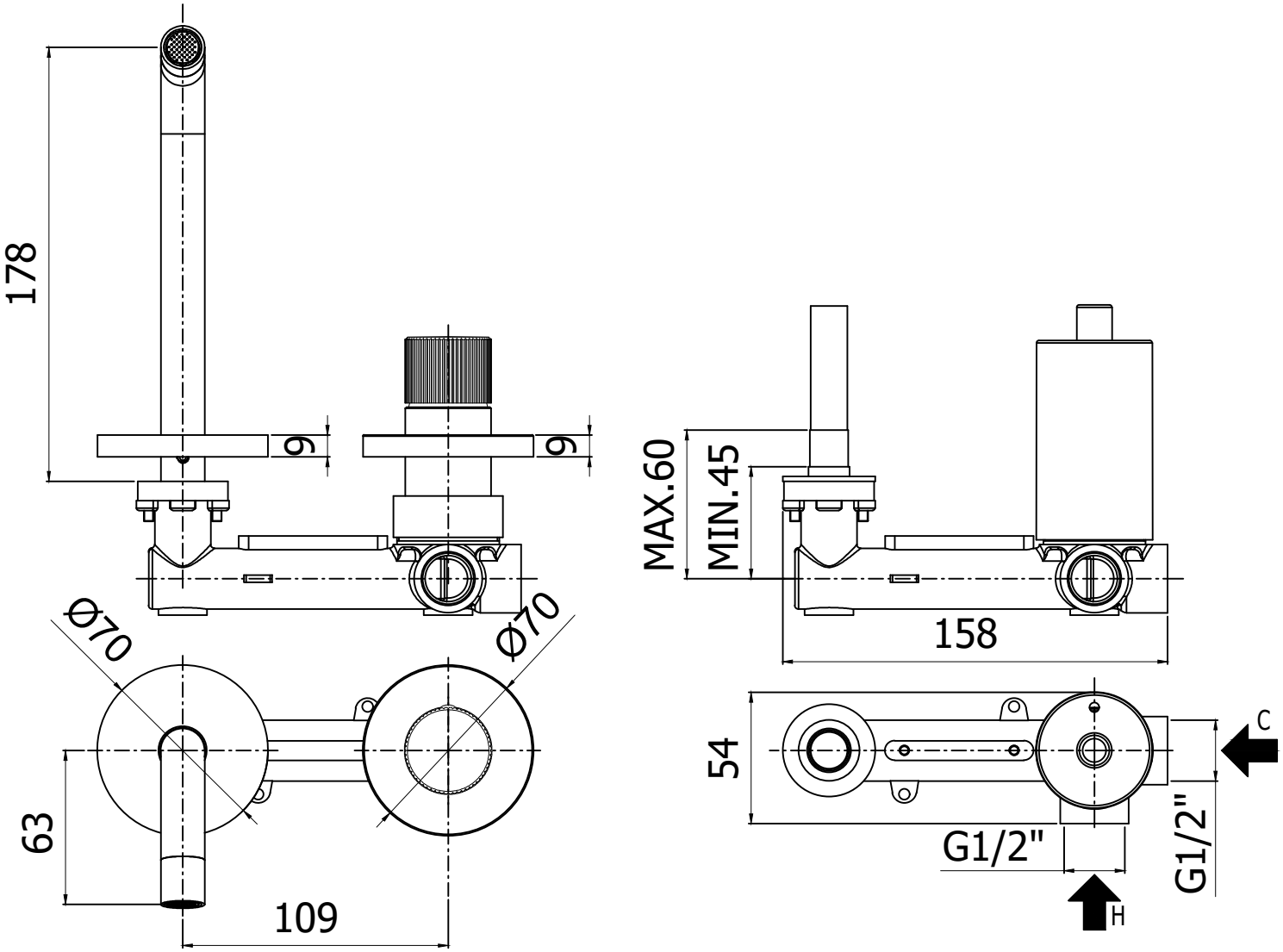
178
9
9
Ø70
Ø70
63
109
MAX.60
MIN.45
158
54
C
G1/2"
G1/2"
H