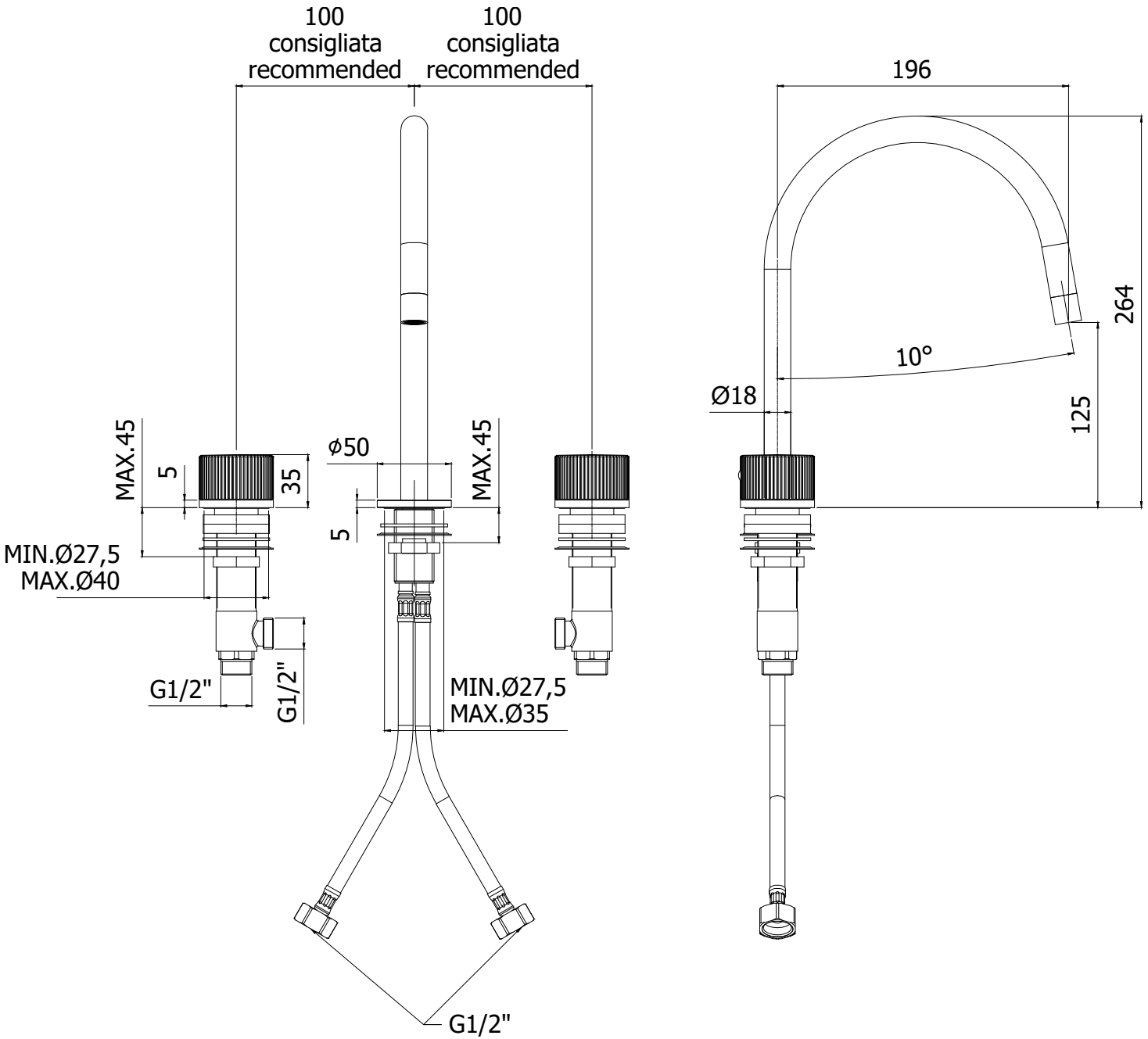
100
consigliata
recommended
100
consigliata
recommended
196
264
10°
Ø18
125
MAX.45
5
35
ø50
MAX.45
5
MIN.Ø27,5
MAX.Ø40
G1/2"
G1/2"
MIN.Ø27,5
MAX.Ø35
G1/2"