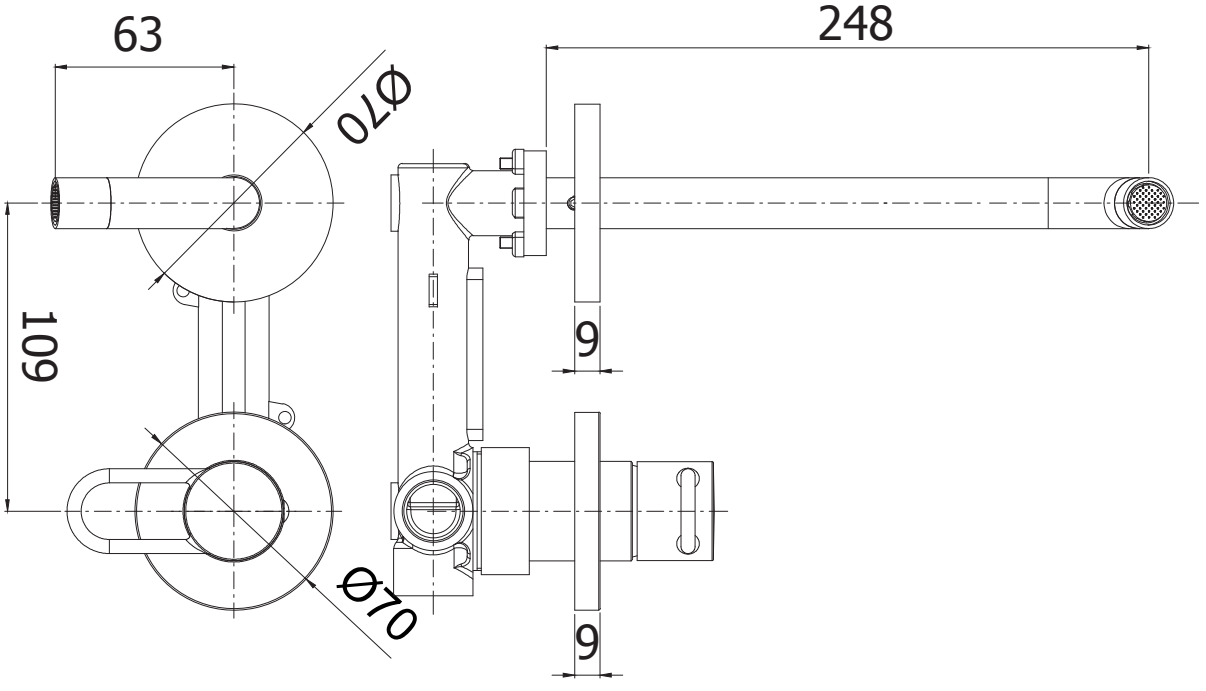
63
248
Ø70
109
9
Ø70
9

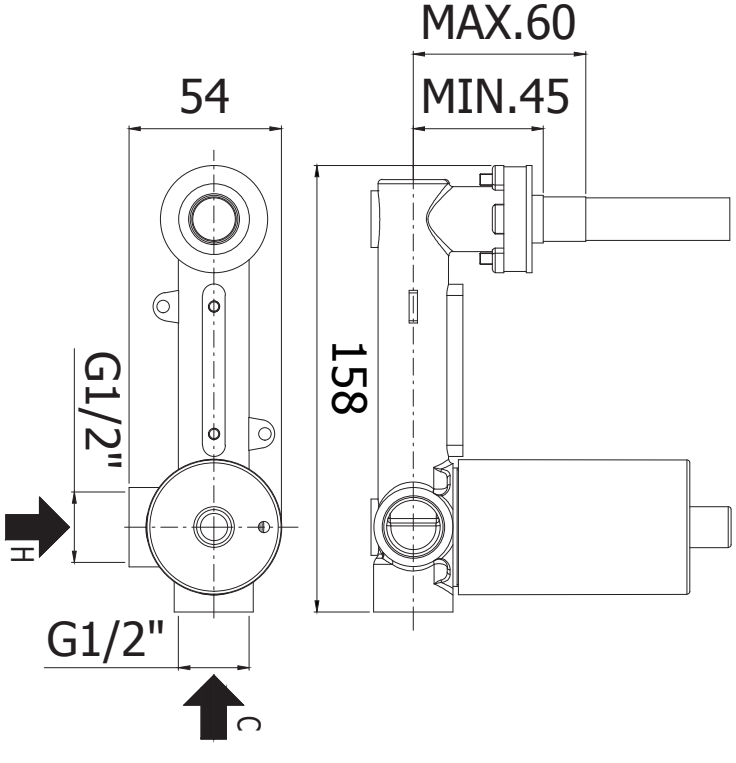
MAX.60
54
MIN.45
158
G1/2"
H
G1/2"
C