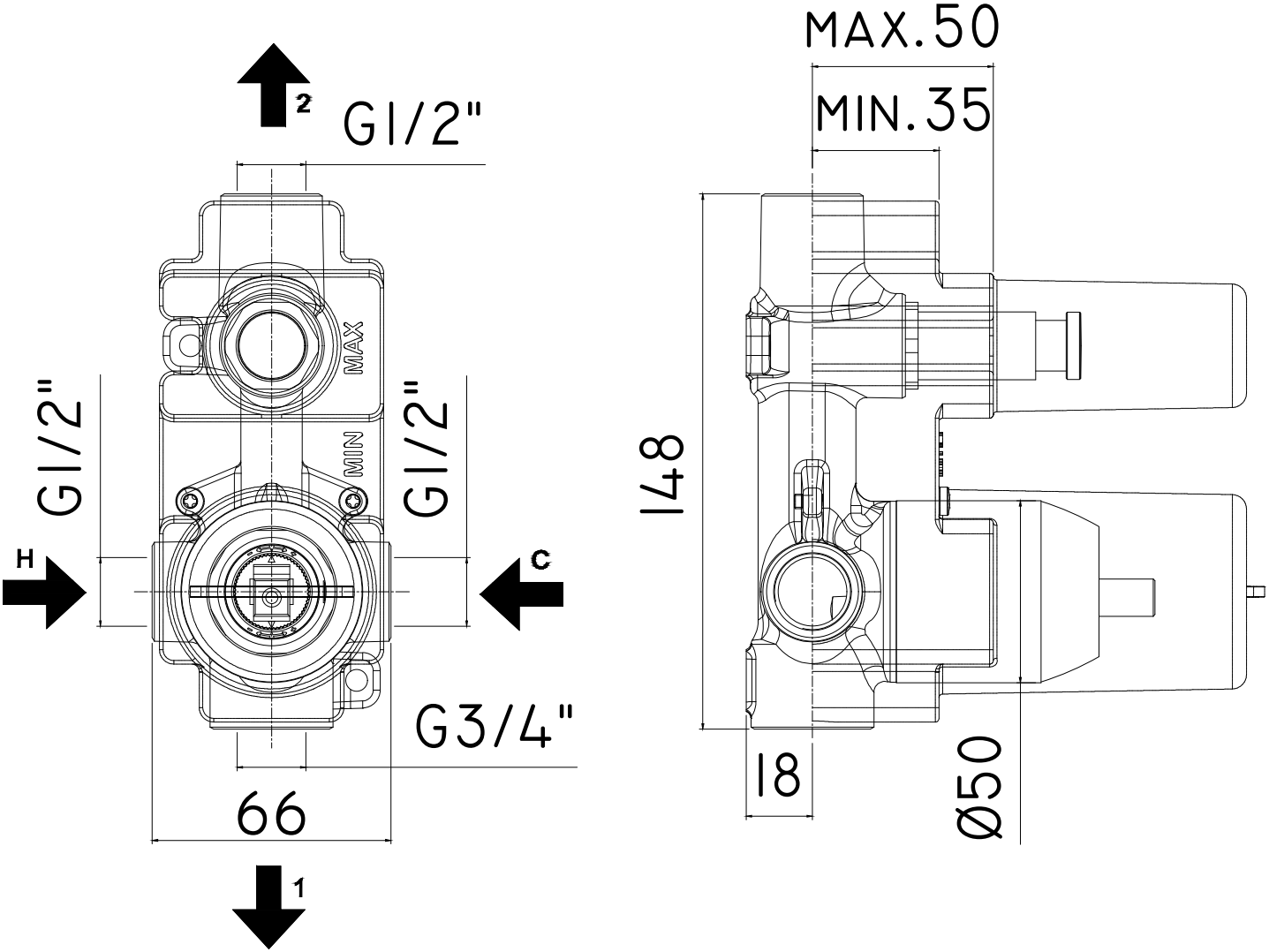
2
G1/2"
MAX
MIN
G1/2"
G1/2"
H
C
G3/4"
66
1
MAX.50
MIN.35
148
18
Ø50