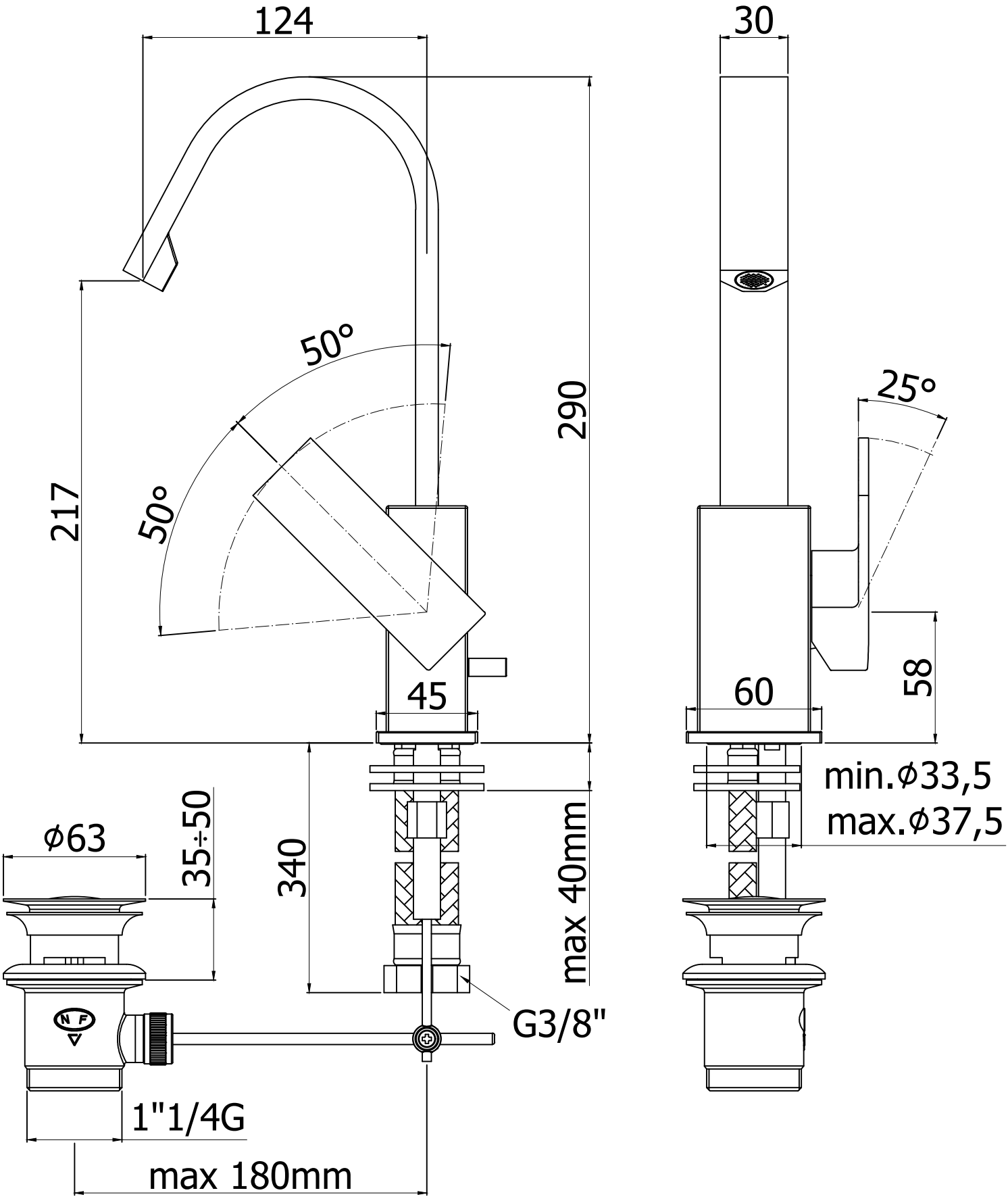
124
30
50°
50°
25°
290
217
45
60
58
min.ϕ33,5
max.ϕ37,5
ϕ63
35÷50
340
max 40mm
G3/8"
1"1/4G
max 180mm