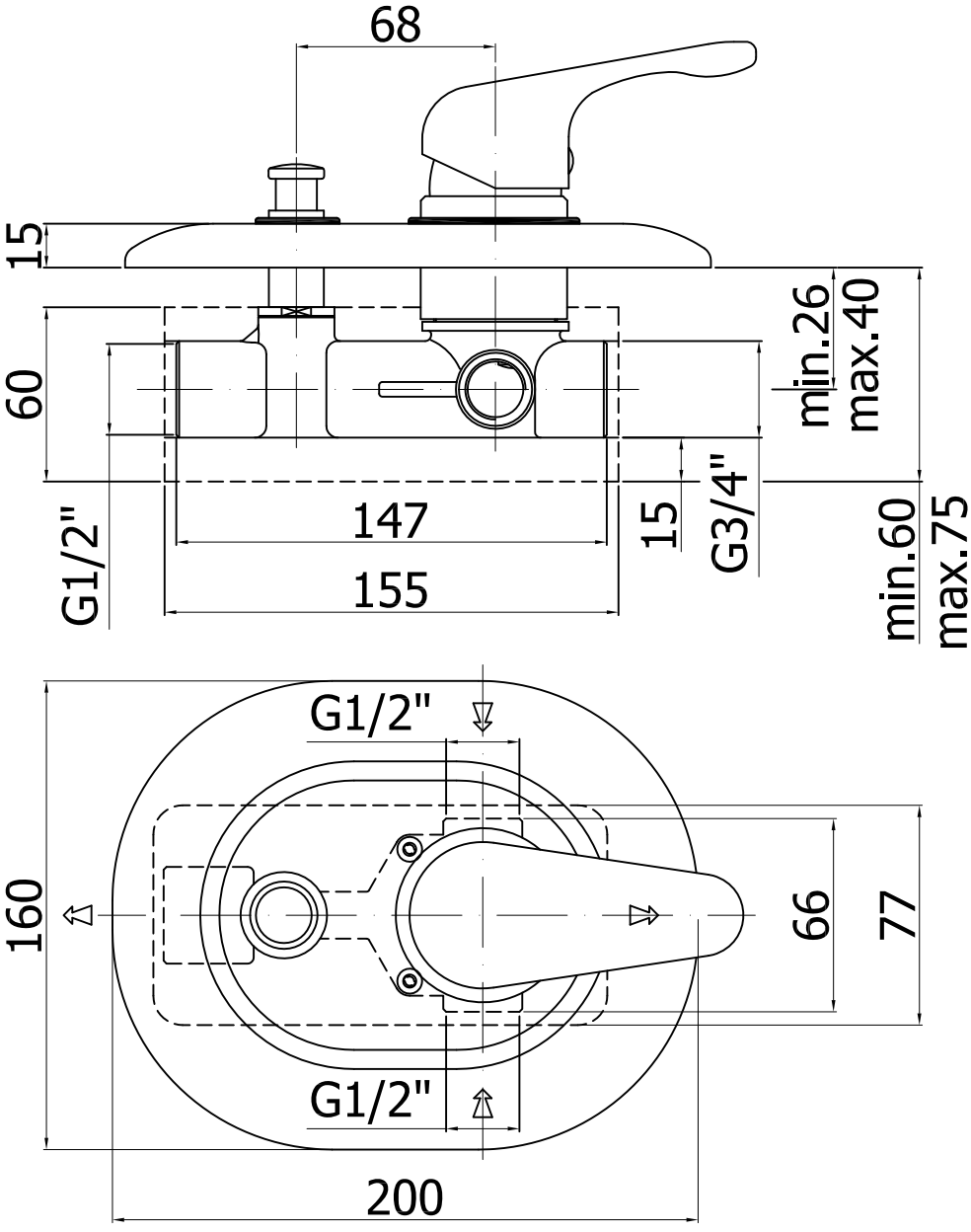
68
15
60
G1/2"
147
155
15
G3/4"
min.26
max.40
min.60
max.75
160
G1/2"
G1/2"
66
77
200